PART NUMBER:

REV.	REVISION	DATE
A	Dimensioned w/numbers (was letters)	1/17/2019

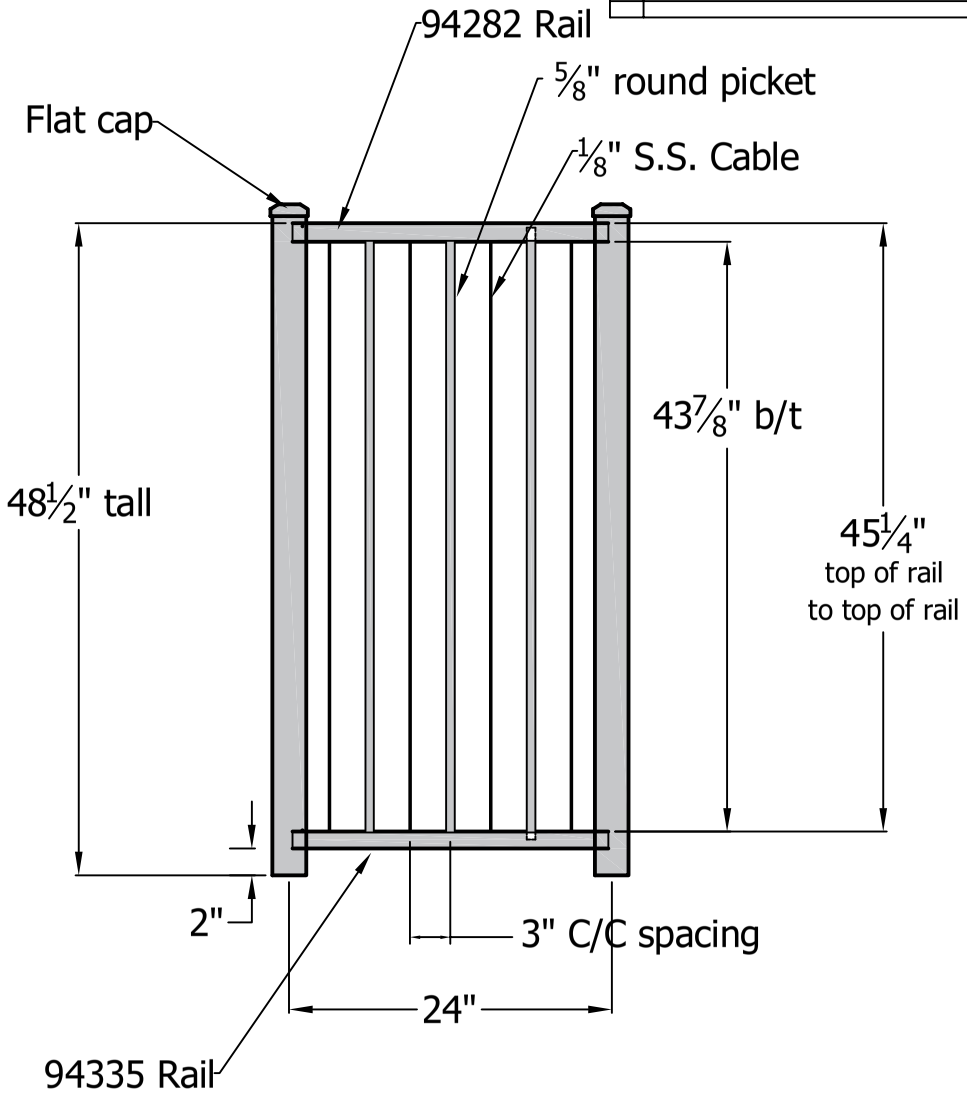

SS Cable length 45½"
Alum picket length 44-7/8" +
2 end plugs add $\frac{5}{8}$" to picket length = 45½"
Rail length 23½"

APPROVED BY:	FINISH:	SHEET SIZE= C SCALE = 1":1"	DRAWN BY: fsb DATE DRAWN: 01-16-2019	PART NUMBER or STYLE: CF 2 Rail 2 ft Section 48.5 Tall 1
DATE APPROVED:	DSI Digger Specialties, Inc. 3446 US 6 EAST Bremen, IN 46506	STANDARD TOLERANCE: .00 ±.01 FRACTIONS: ±1/16" .000 ±.005 ANG. ±.5' FIRST USED ON:	LOC: Z:\Aluminum\Cable Fence\CF Sections DRAFT: 8/23/20185F	Quote requested by: PART NAME: SHEET OF REV. A

4 3 2 1

A B C D